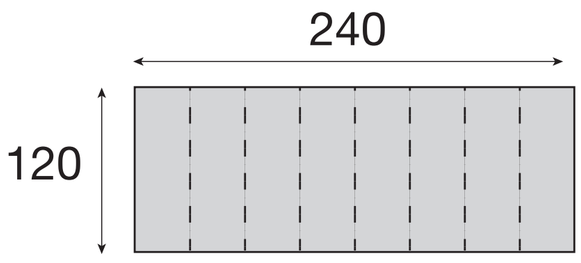

F3900

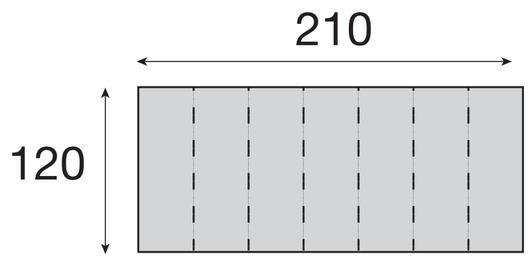

F3800

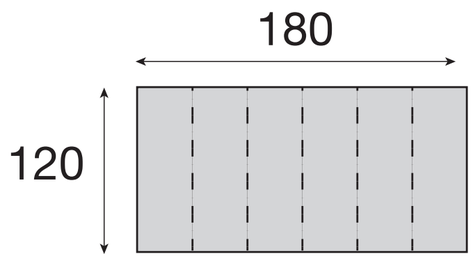

F2700

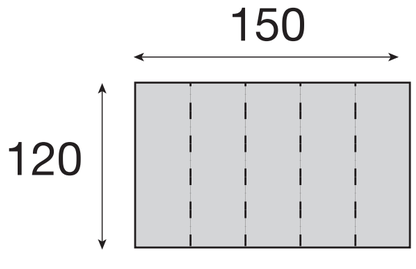

F2600

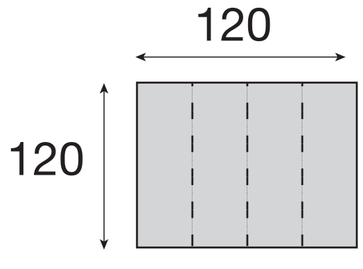

F1000

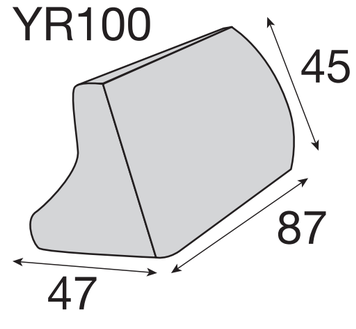

made in Europe